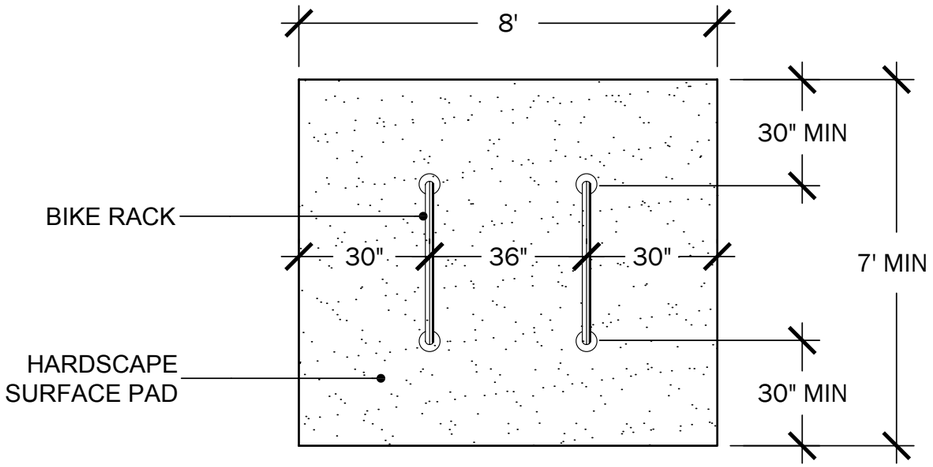

TYPICAL MULTIPLE BIKE RACK LAYOUT DETAIL
N.T.S.

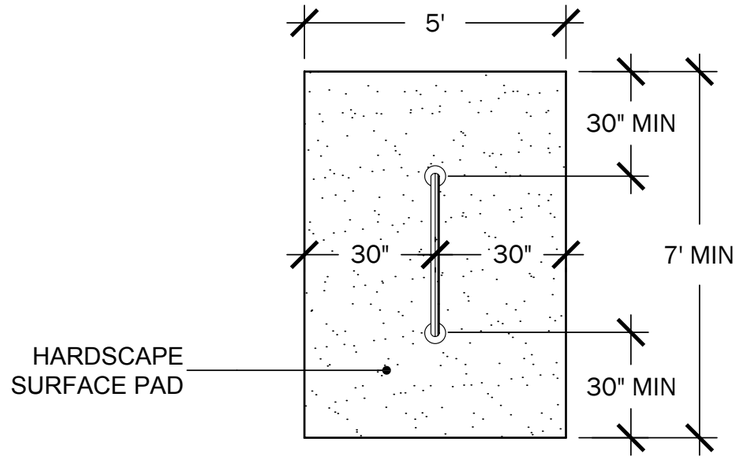

TYPICAL SINGLE BIKE RACK LAYOUT DETAIL
N.T.S.

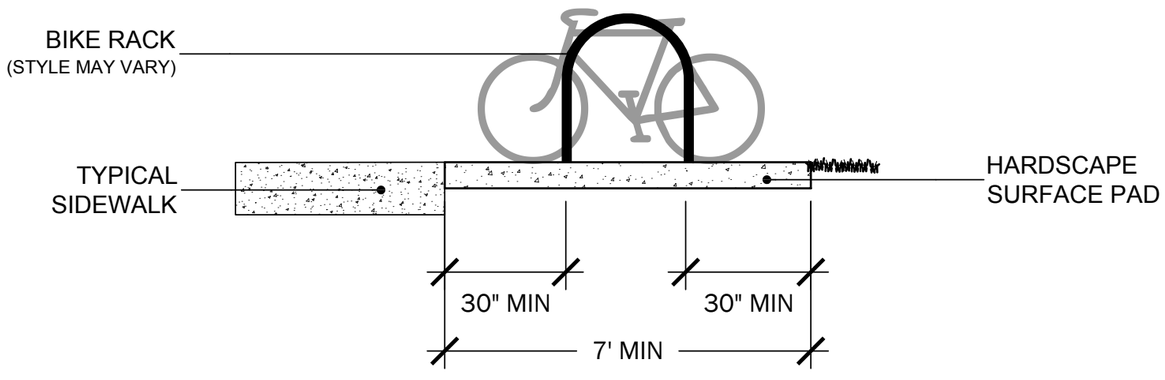

TYPICAL BIKE RACK ELEVATION
N.T.S.

Notes:

1. Bicycle parking areas shall be located for the convenient access to site amenities and primary building entrances.
2. Bicycle parking areas shall be located on a hardscape surface, physically separated from automobile parking lots.
3. They shall be designed to provide adequate space for ingress and egress, and not impede pedestrian and vehicle circulation.
4. Bicycle parking areas shall be designed to provide adequate space for ingress and egress.
5. Bicycle racks shall be designed to support a bicycle frame in two places in a stable upright position.
6. Bicycle racks shall be securely anchored to the lot surface.

city of greenville

No.	DATE	BY/CHKD

REVISION

PROJECT NO.

DATE: July 7, 2010

DRAWN BY: ANDREW MEEKER, URBAN DESIGNER

Bike Rack
Layout Details